Installation Instructions

ProShell Support Profile System 128
ProShell Support Profile System 206

Order Number:
0800xxx-…

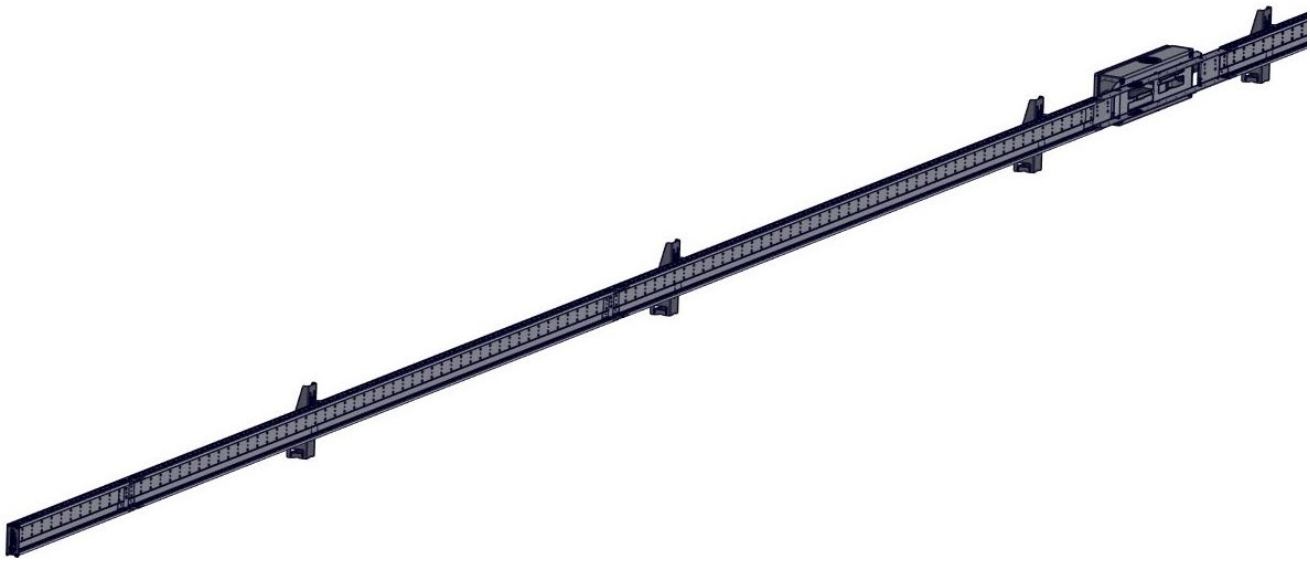

Installation Instructions

ProShell Support Profile System 128
ProShell Support Profile System 206

Contents

1 Intended Use

These installation instructions apply to the ProShell Support Profile System . The installation of the Conductor Rail Systems 0812 and 0831 in the ProShell Support Profile System is described in the Installation Instructions MV0800-0031.

DANGER!

Danger due to cutting and/or crushing!

When handling, installing and connecting the support profile rails (with connector and system holder), there is a risk of injury due to cutting, crushing/clinching or pinching of the fingers.

→ Wear suitable protective clothing as well as protective gloves and protective shoes.

WARNING!

Check deviating installation situations or combinations!

Deviating installation situations or combinations are only permitted after inspection and approval by the manufacturer!

CAUTION!

All illustrations are intended as visualization aids!

The illustrations may not correspond to the current version of a component or assembly!

Observe the installation instructions!

Conductix-Wampfler accepts no liability or responsibility for damages and production faults that result from failure to observe these installation instructions.

2 Personal Protective Equipment

The following protective equipment must be worn during installation:




- Protective gloves
- Protective eyewear
- Protective footwear
- Protective headgear/impact cap

3 Required Tools

Requirements for the installation environment:

- The installation area must be accessible, dry and secure against moisture ingress.
- The floor must be level and suitable for setting the dowels.

The following tools are required for the installation:

ProShell Support Profile System:

- Tool for drilling and setting the dowels for the consoles
- Torque wrench with a measuring range of 5 Nm to 25 Nm and socket SW17 for fastening the dowels
- Open-end wrench SW 13 for system holder
- Measuring and levelling tool (e.g. positioning laser) for aligning the system holders and consoles
- Soft-faced hammer (plastic) 300 g or similar tool
- Smooth files for possible reworking of the ProShell Support Profile (saw cut)
- Metal saw/hacksaw or angle grinder for correcting the ProShell Support Profile
- Crosshead screwdriver
- Open-end wrench SW10
- Cordless drill Ø 6.4 mm
- Plate shears
- ProShell 128 installation tool (08-V015-0482)
- ProShell 128 tool kit (08-V015-0458)

4 System Components

Fig. 1: Support profile rail 3960 mm long
(Order No.: 08-P054-0214)

Fig. 2: Support profile connector
(Order No.: 08-V001-0515)

Fig. 3: System holder
(Order No.: 08-H016-0310)

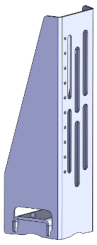

Fig. 4: Console (Order No.: 080043-11x11x…)

Fig. 5: ProShell 128 end assembly
(Order No.: 08-H016-0376)

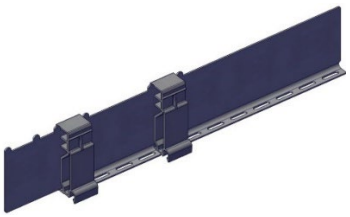

Fig. 6: ProShell holder for switch flag
(Order No.: 08-H016-0324)

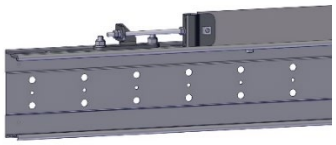

Fig. 7: Positioning module 0800
(Order No.: 080243-1)

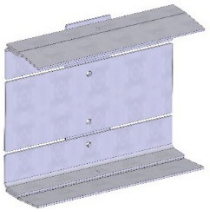

Fig. 8: Repair kit for damage to a 4,000 mm long support profile rail
(Order No.: 08-V001-0555)

ProShell 128 tool kit (08-W100-0592)

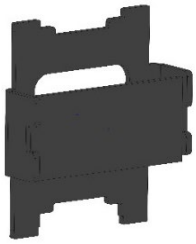 Fig. 9: Support profile connector installation tool	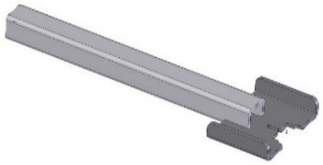 Fig. 10: System holder locking mechanism	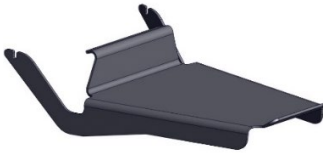 Fig. 11: Auxiliary console for installing the conductor rail

5 Installation

5.1 ProShell Support Profile System

The ProShell Support Profile System protects the conductor rail system and allows easy integration into warehouse and logistics applications on a straight track.

The support profile system is available in two different versions:

- ProShell 128: 4-/5-pole
- ProShell 206: 7-pole

In both system variants, either the Conductor Rail System 0812 or the Conductor Rail System 0831 can be installed (see MV0800-0031).

Use the QR code ("click" or "scan") to see our animation:
Overview of complete ProShell 128 System.

Use the QR code ("click" or "scan") to see our animation:
Overview of complete ProShell 206 System.

5.1.1 Install consoles

Starting from the line feed, the installation begins with the arrangement of the consoles:

1. The installation begins with the arrangement of the consoles, starting from the line feed. On both sides of the center from the fastening frame for the line feed, a console must be installed at a distance of 800 mm - 1500 mm or 1500 mm (see Fig. 12 up to Fig. 13 for ProShell 128, see Fig. 14 for ProShell 206).

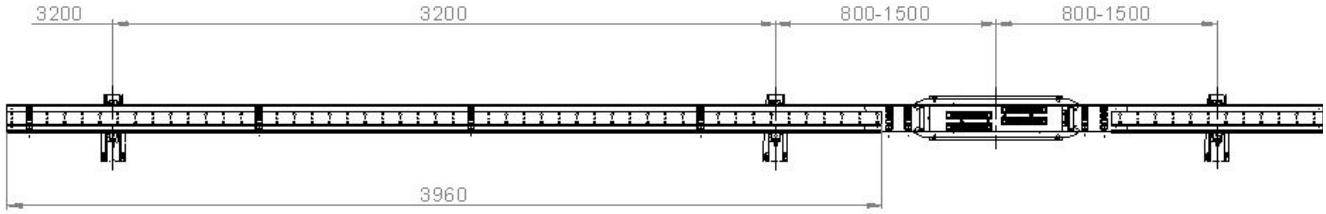

Fig. 12: ProShell 128 distances with Conductor Rail System 0812

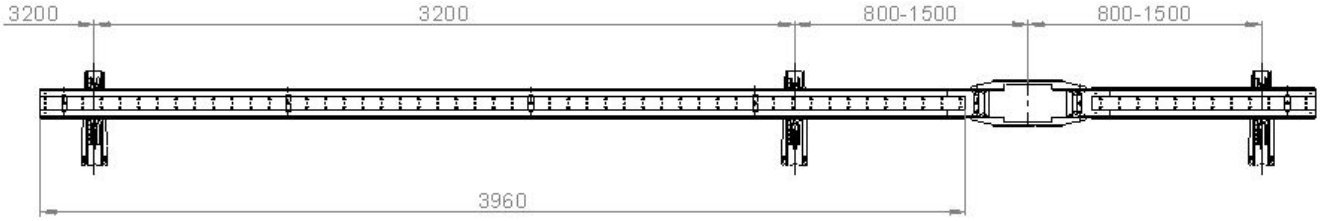

Fig. 13: ProShell 128 distances with Conductor Rail System 0831

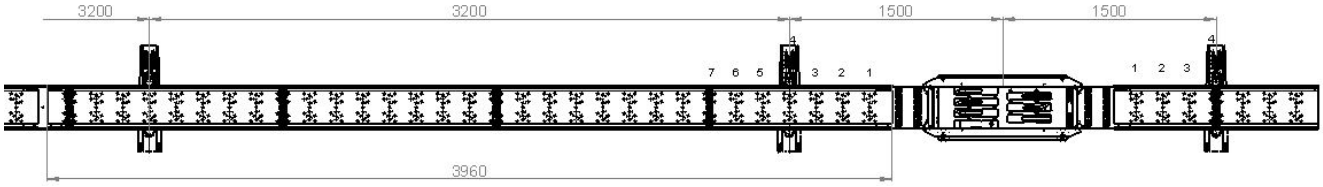

Fig. 14: ProShell 206 distances with Conductor Rail System 0812

2. Select the distance between the consoles according to the support profile system variant and conductor rail system (see Fig. 12 to Fig. 14), but independently of the support profile connectors.

3. Align the distance of the console using the SRU track rail (see Fig. 15) and drill a hole Ø 10 mm onto the installing surface for the dowels (see Fig. 16).

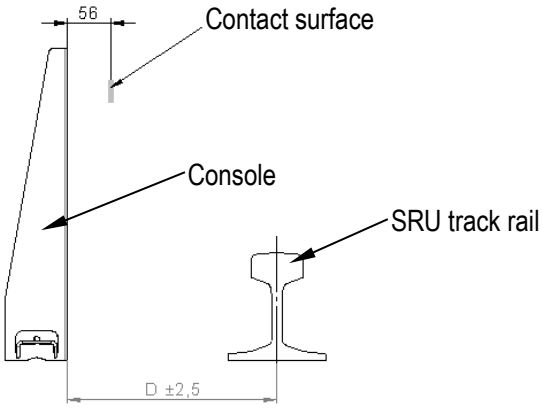

Fig. 15: Distance of console to contact surface and to SRU track rail

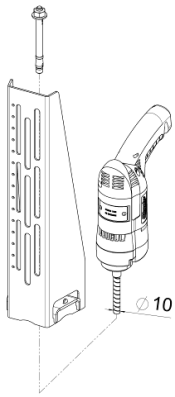

Fig. 16: Dowel (Order No.: 08-162666) according to manufacturer's instructions

4. Install the console using the dowels. For this purpose, use a soft-faced hammer and a torque wrench (SW17, torque wrench: **45 Nm**) according to the manufacturer's instructions (see Section 6).

Use the QR code ("click" or "scan") to see our animation:
Parallelism of consoles.

Use the QR code ("click" or "scan") to see our animation:
Install console.

5. The last console should have a max. distance of 500 mm from the end assembly (see Fig. 17).

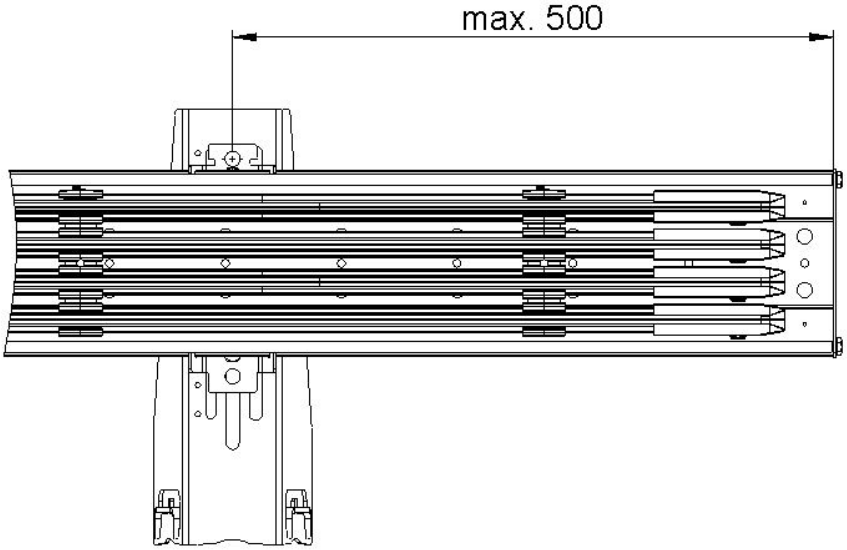

Fig. 17: Console with max. distance of 500 mm from end assembly

5.1.2 Install system holder

Requirement:

- Install all consoles in the floor before installing the system holders (see Section 5.1.1).

The consoles must also be aligned with the SRU track rail (see Fig. 15).

Procedure:

1. Align the system holder (1) on the track profile of the customer's vehicle (e.g. RBG track rail (3)) as a reference point using a leveling tool (e.g. positioning laser) (see Fig. 18 and Fig. 19).
2. Tighten the system holders (1) on the brackets (2) with the hexagon head screw (6), washer (5) and hexagon nut (4) (SW13, torque wrench: 20 Nm). Make sure that the upward curved retaining lugs of the system holder are always on top.

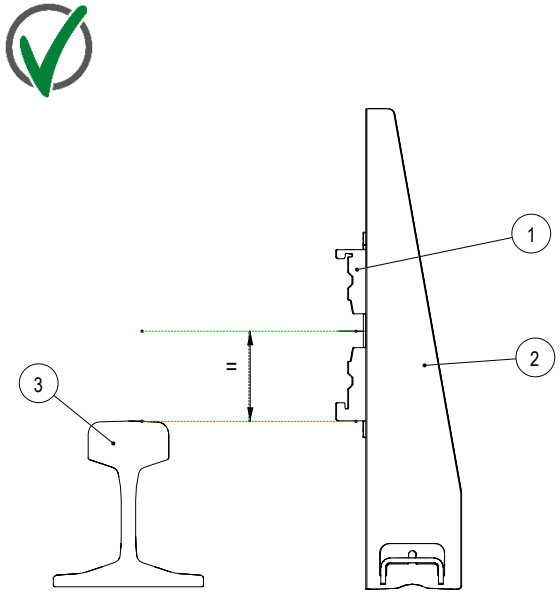

Fig. 18: The system holder is aligned with the SRU track rail

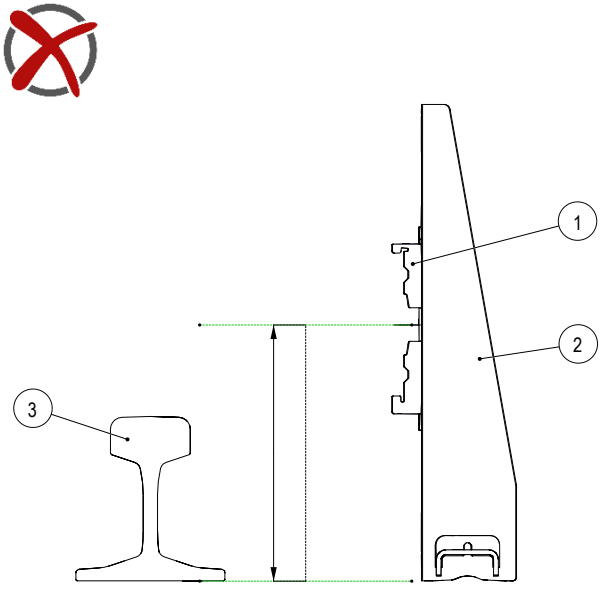

Fig. 19: The system holder is aligned to the floor

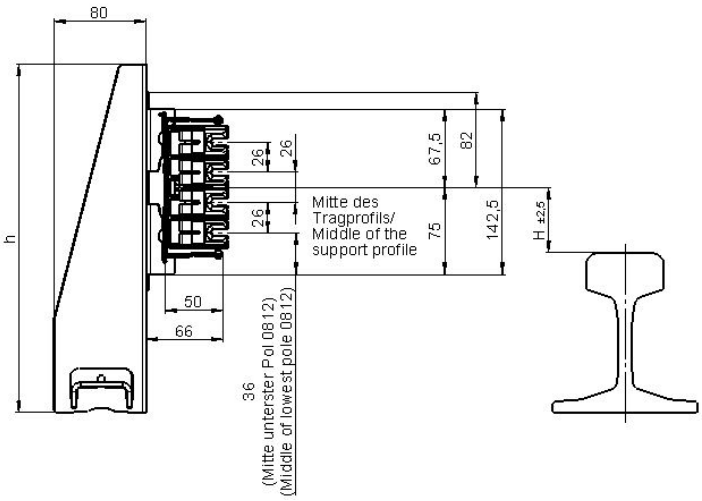

Fig. 20: Dimensions of ProShell 128 system holder with Conductor Rail System 0812

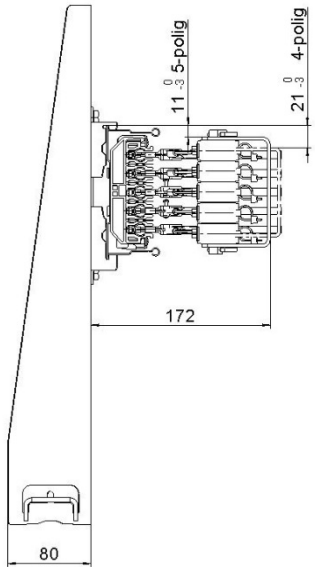

Fig. 21: Dimensions of ProShell 128 system holder with Conductor Rail System 0831

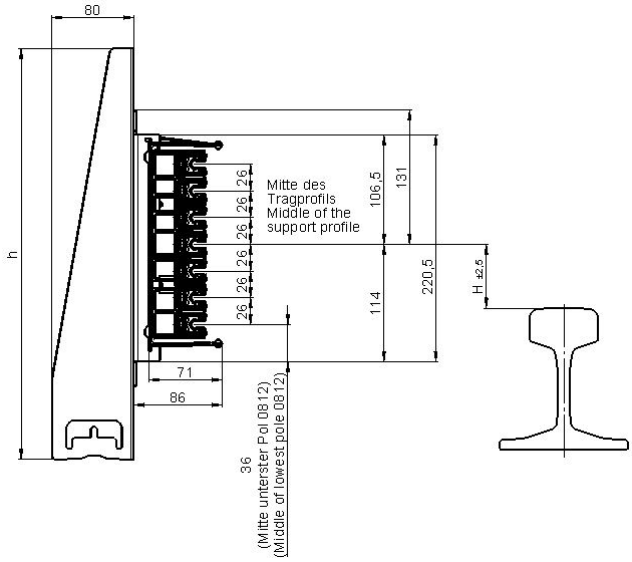

Fig. 22: Dimensions of ProShell 206 system holder with Conductor Rail System 0812

Use the QR code ("click" or "scan") to see our animation:
Align and tighten system holders.

5.1.3 Connect ProShell support profile rails

DANGER!

Danger due to cutting and/or crushing!

When handling, installing, and connecting the ProShell support profile (with connector and system holder), there is a risk of injury due to cutting, crushing/clinching or pinching of the fingers.

→ Wear suitable protective clothing such as protective gloves and protective shoes.

Grounding of the support profile system!

As a rule, a protective conductor connection is produced from the support profile system to the storage rack. The system operator is responsible for the grounding concept.

→ Ground the ProShell support profile or consoles on both sides.

→ Ground at several points along the support profile system.

→ Make the number of connections according to the grounding connections of the storage rack. The grounding connection to the ProShell Support Profile System can be made via suitable screw connections using DIN parts.

→ The protective conductor connection is not part of the standard scope of delivery and can be optionally ordered with the Conductor Rail System 0812 (see MV0800-0031).

Procedure:

1. Insert the fastening frame (depending on the conductor rail program or line feed option with or without terminal box) onto the short support profile rail (960 mm).
2. Hook the fastening frame incl. ProShell support profile rail onto the system holder from below (see Fig. 23). For the installation of the line feeds, see MV0800-0031.
3. After final positioning of the support profile rails, press the retaining collar completely down with the locking tool (Order No.: 08-V015-0458) (see Fig. 24 and Fig. 25).

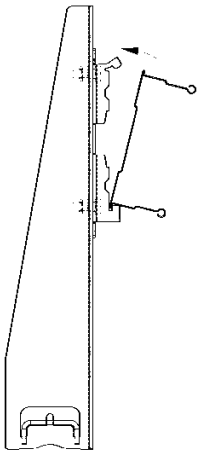

Fig. 23: Hook the support profile rail onto system holder from below

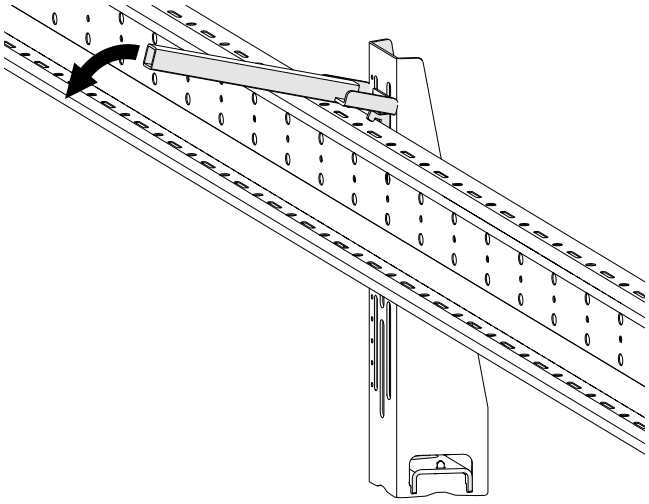

Fig. 24: Press down retaining collar of system holder

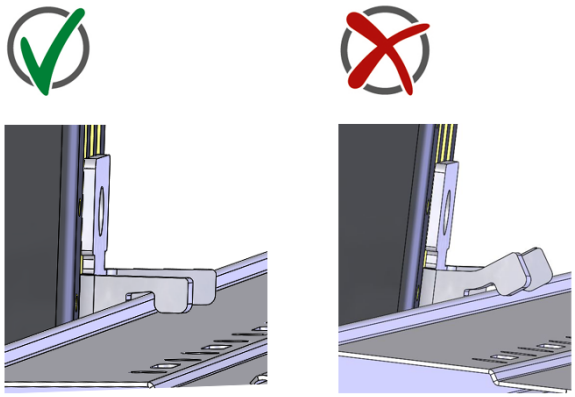

Fig. 25: Press down retaining collar of system holder correctly

Use the QR code ("click" or "scan") to see our animation:
Hang support profile rail in system holders.

4. Use the supplied installing tool (Order No.: 08-V015-0483) (1) to connect the individual ProShell support profile rails. The longer pins of the tool are located at the top. They are threaded into the elongated holes of the ProShell support profile rail (see Fig. 26). The ProShell support profile rail can be tapped onto the projecting part of the installation tool (1) with the aid of a rubber hammer (see Fig. 26).
5. A connector tab (4) is integrated on the fastening frame (depending on the conductor rail program or line feed option) (3), so that the additional ProShell support profile rails (2) can be tapped in using the installation tool (Order No.: 08-V015-0483) (1) and a soft-faced hammer (see Fig. 27).

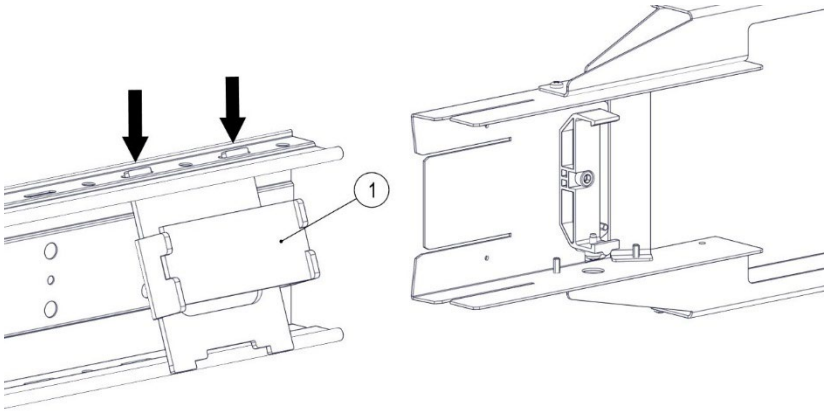

Fig. 26: Install installing tool (1) in support profile rail

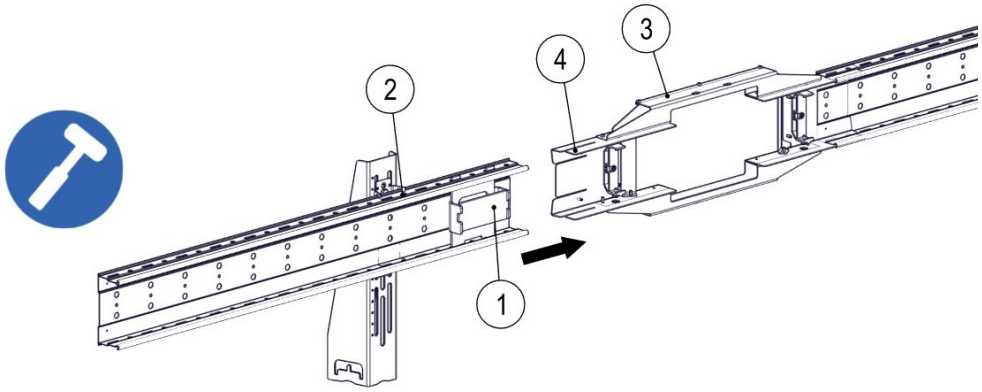

Fig. 27: Tap ProShell support profile rail (2) onto connecting tabs (4) of fastening frame (3)

6. For the further installation of the ProShell support profile rails, first slide a support profile connector (5) onto the end of the ProShell support profile using a soft-faced hammer. Pay attention to the position of the connector tabs (4) (see Fig. 28).

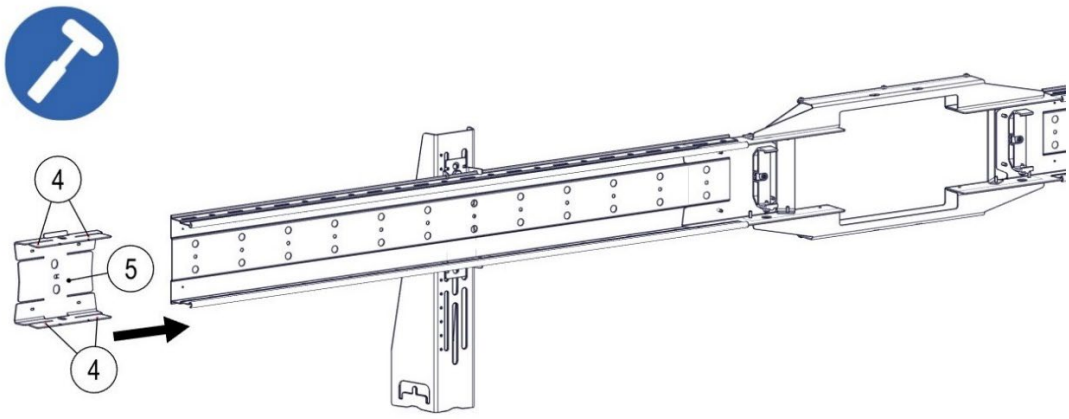

Fig. 28: Tap support profile connector (5) onto the support profile rail

7. Then insert the next ProShell support profile rail (6) onto the system holder and use the installation tool (1) to tap on the support profile connector (5) of the previous ProShell support profile rail (2) using a soft-faced hammer.

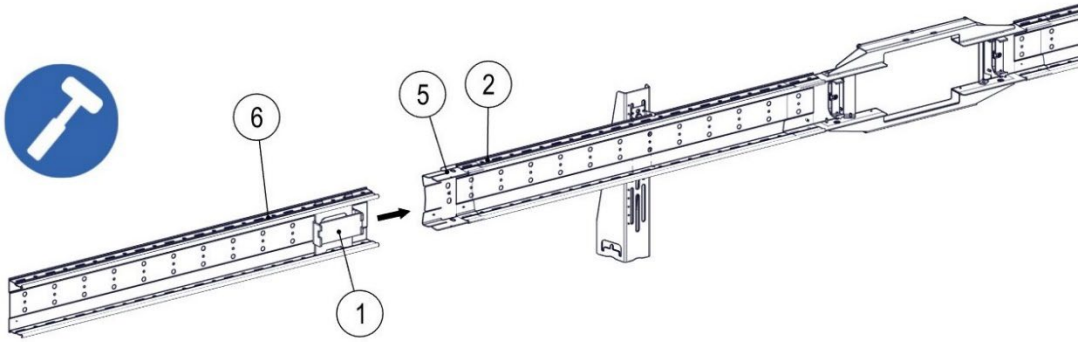

Fig. 29: Install next support profile rail (6)

8. Connect all support profile rails in the same way and remove the installation tool (Order No.: 08-V015-0483) from the support profile system after completion of the installation.

Use the QR code ("click" or "scan") to see our animation:
Install support profile.

5.1.4 Install anchor point

1. Install the anchor point consisting of the drill screw (1) and the anchor point plate (2) on the system holder (3) of the first and last console (4) of the lane (see Fig. 30) before connecting additional support profile rails. Install an anchor point on the other end of the lane as well.

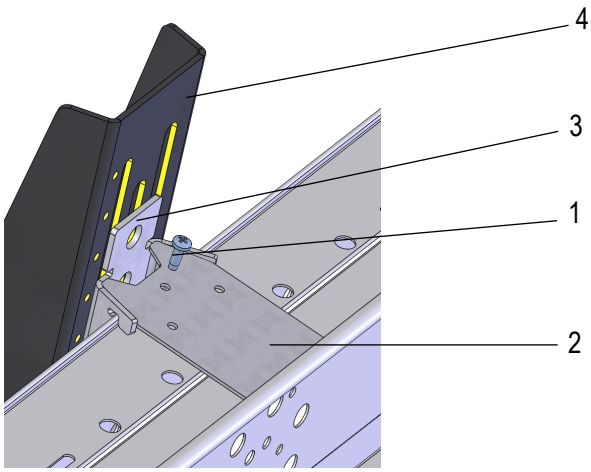

Pos.	Name
1	Drilling screw (crosshead)
2	Anchor point plate
3	System holder
4	Console

Fig. 30: Install anchor point on first installed ProShell support profile

Use the QR code ("click" or "scan") to see our animation:
Install anchor point plate.

5.1.5 Install end assembly

Procedure:

1. Install the end caps on the system ends of the conductor rail system. For the installation of the end caps of the conductor rail systems, refer to the further documentation (MV0831-0006 or BAL0812-0001).
2. Install the end assemblies at both ends of the ProShell support profile at a corresponding distance from the end caps (see Fig. 31). To do this, slide the bracket (A) of the end plate onto the straight surface of the ProShell support profile and install the hexagon screws M6 with an open-end wrench (see Fig. 32 and Fig. 33).

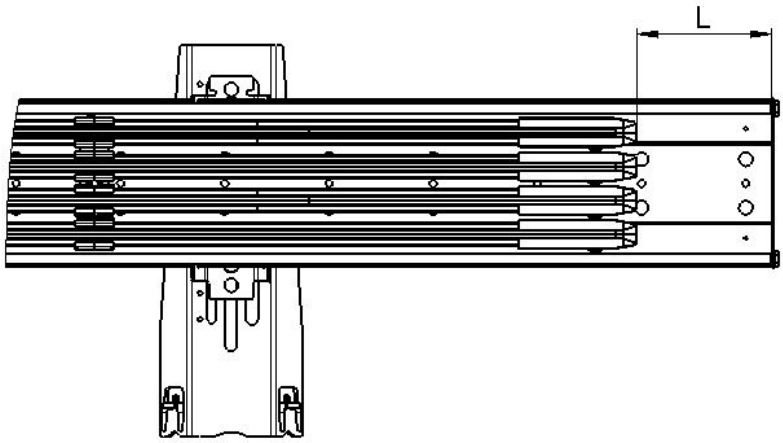

Fig. 31: Distance from end caps to end assembly

	L
0812	100 mm
0831	200 mm

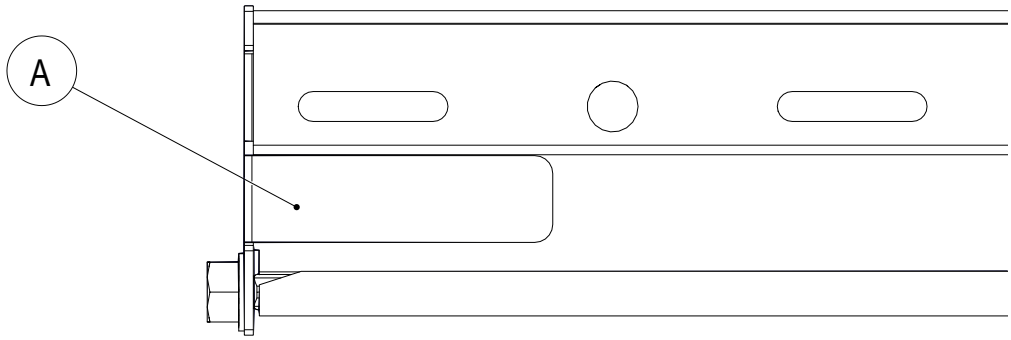

Fig. 32: End plate bayonet connector (A)

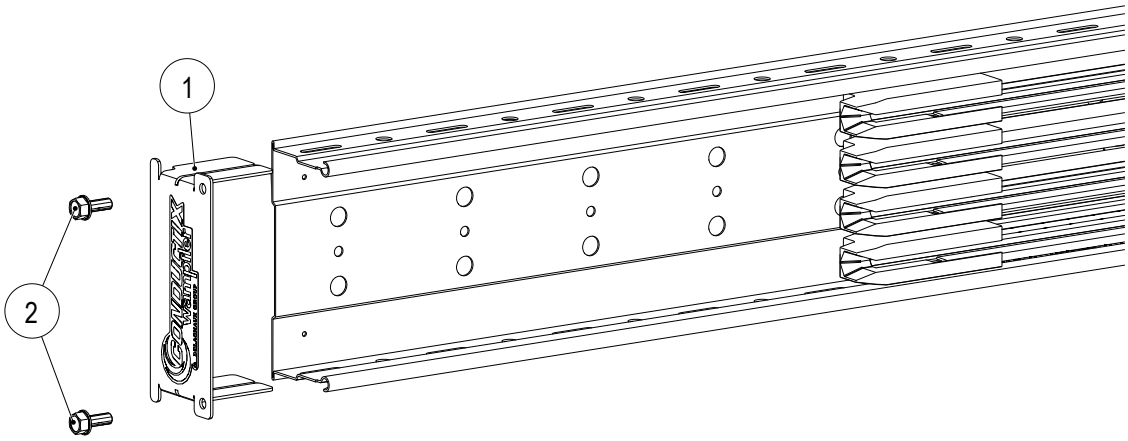

Fig. 33: Screw end plate (1) to ProShell support profile end

Use the QR code ("click" or "scan") to see our animation:
Install end caps and end assemblies 0831.

Use the QR code ("click" or "scan") to see our animation:
Install end assemblies 0812.

5.1.6 Install the optional positioning module

For a flexible and simple position determination, the positioning module can optionally be installed on the top and bottom of the ProShell Support Profile System. For this purpose, the positioning band profile, an information carrier, is glued onto a thin stainless-steel band. The positioning band can be, for example, a LEUZE barcode band and is usually glued to the positioning band profile at the manufacturer. The positioning band profile with glued positioning band is then attached to the beginning and end of the ProShell Support Profile System using a clamping unit above or below (see Fig. 34 to Fig. 36). For installation, observe the distances in Fig. 37 and Fig. 38.

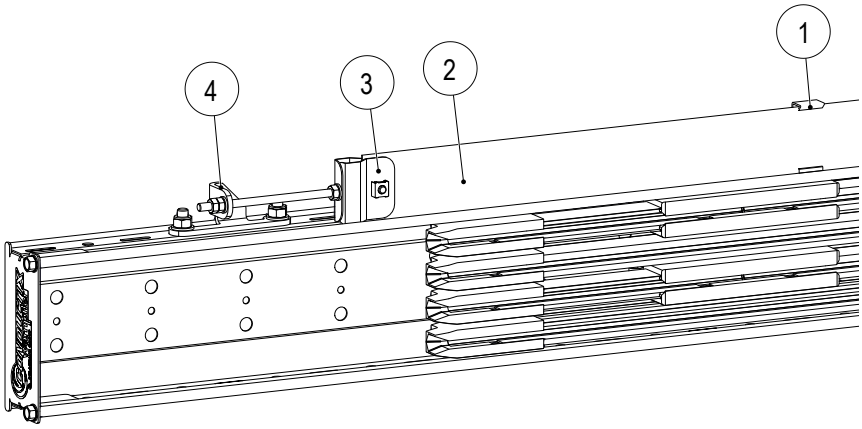

Fig. 34: Positioning module installed above

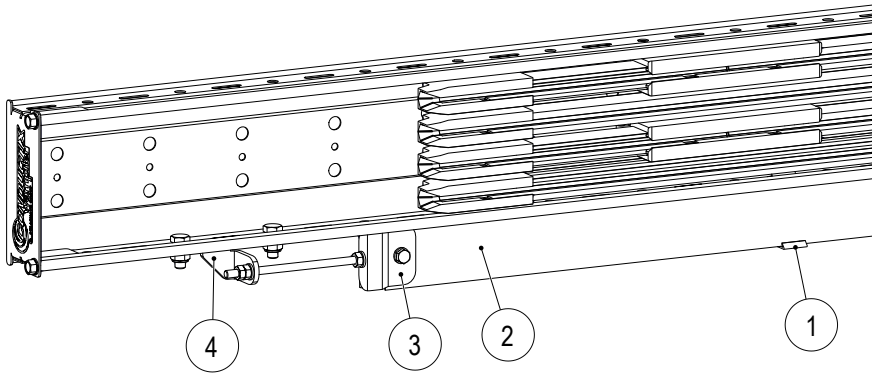

Fig. 35: Positioning module installed below

Pos.	Name
1	Band bracket
2	Positioning band profile:
3	Install clamping unit plate
4	Clamping unit

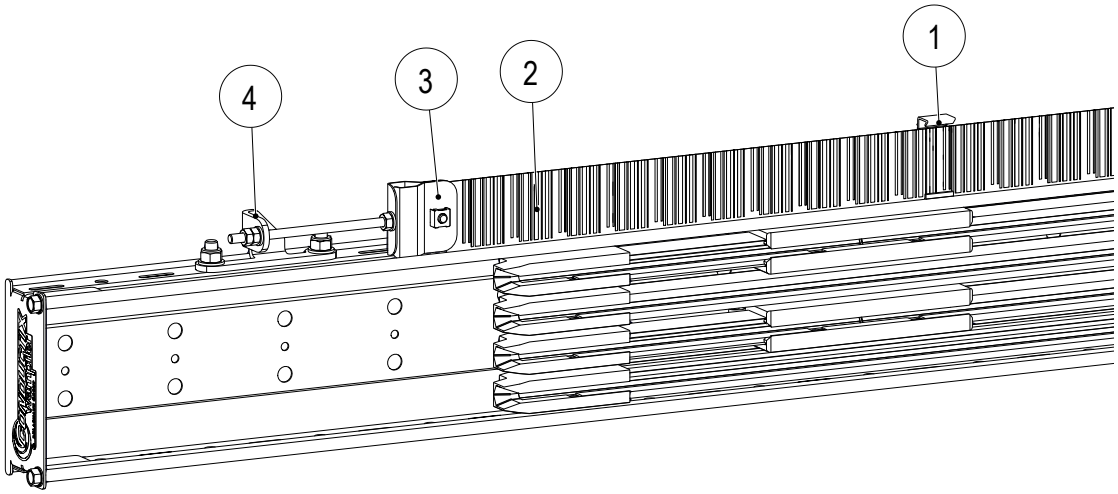

Fig. 36: Positioning module installed above incl. glued positioning band

Pos.	Name
1	Band bracket
2	Positioning band profile with glued positioning band (here: LEUZE barcode band)
3	Install clamping unit plate
4	Clamping unit

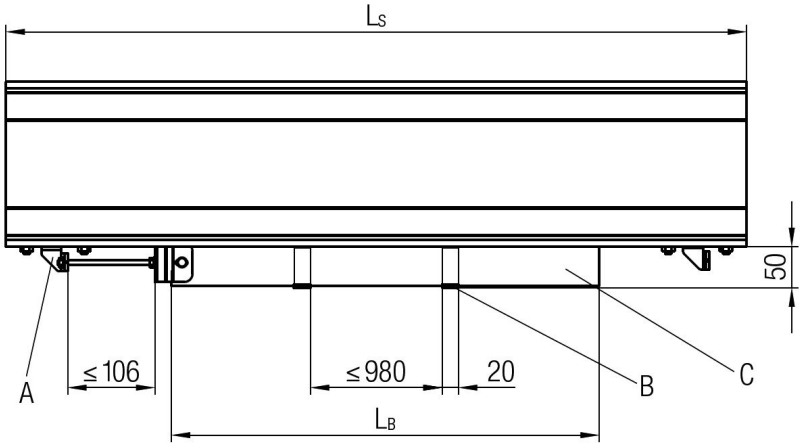

Fig. 37: Implementation below the ProShell support profile

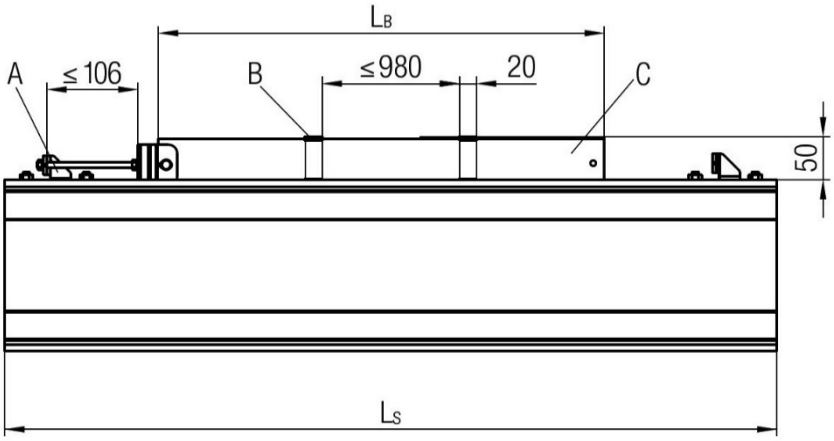

Fig. 38: Implementation above the ProShell support profile

Pos.	Name
L_B	Positioning band profile length
L_S	System length
A	Clamping unit
B	Band bracket
C	Positioning band

Observe the installation instructions!

The positioning module can also be installed in other types of support profiles. Observe the Installation Instructions MV0800-0015!

Procedure:

1. Install the band brackets (1) in the groove of the ProShell support profile rail (2). Tilt the band bracket slightly and carefully clip it onto the slot on the ProShell support profile (top/bottom) (see Fig. 39 and Fig. 40).
2. Install all other band brackets in the same way, maintaining the distance of 1000 mm (see Fig. 41).

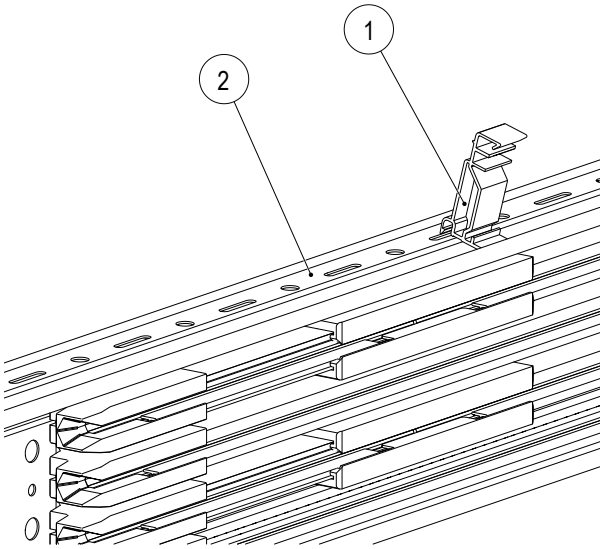

Fig. 39: Band bracket (1) in ProShell support profile (2)

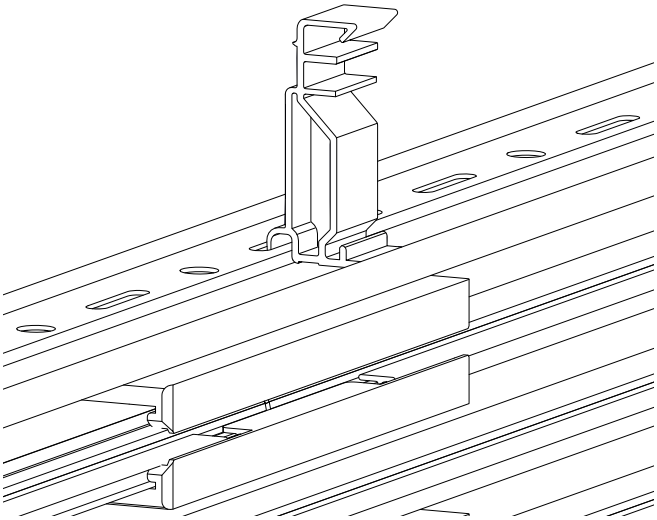

Fig. 40: Band bracket is installed

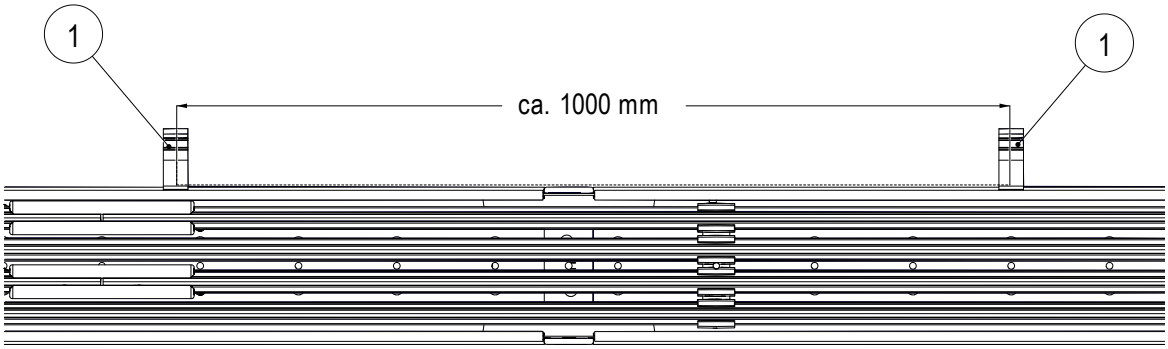

Fig. 41: Spacing of band brackets

3. Tighten the bracket (3) of the clamping unit to the bottom or top of the ProShell support profile using the hexagon screw M6 (6), washer (5) and hexagon nut (4) with an open-end wrench SW10 (see Fig. 42 and Fig. 43).

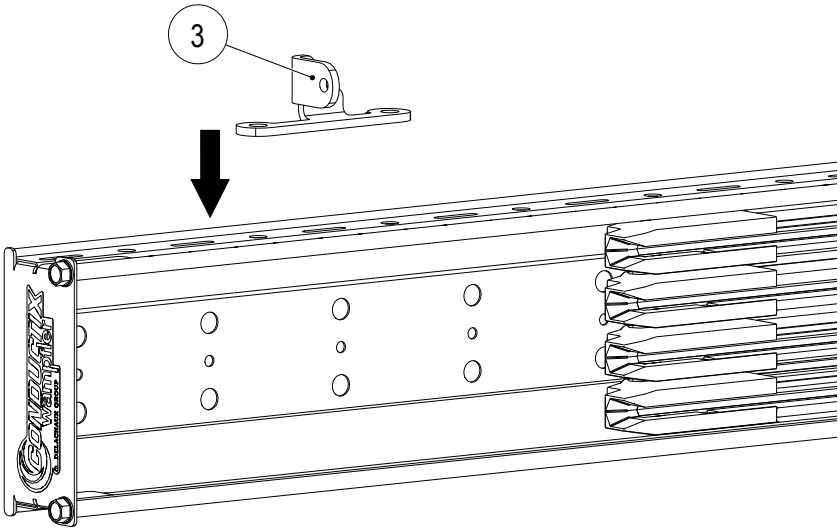

Fig. 42: Align bracket (3) with the ProShell support profile

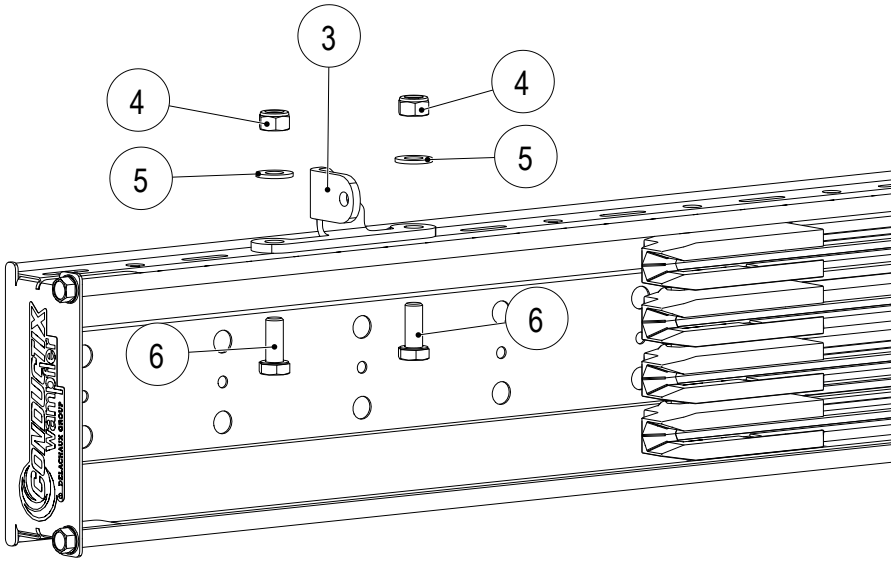

Fig. 43: Install bracket (3) with the screw connections (4, 5 and 6) on the ProShell support profile

4. Slide the threaded rod (8), including the fastening plate (7) of the clamping unit, onto the bracket and lock the threaded rod (8) with the two hexagon nuts (9) and washer (10).

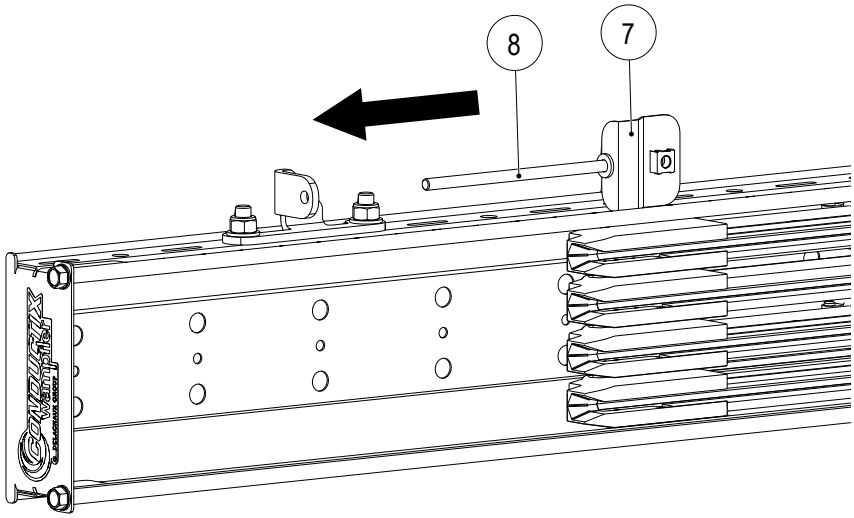

Fig. 44: Slide threaded rod (8) with fastening plate of clamping unit (7) onto holder

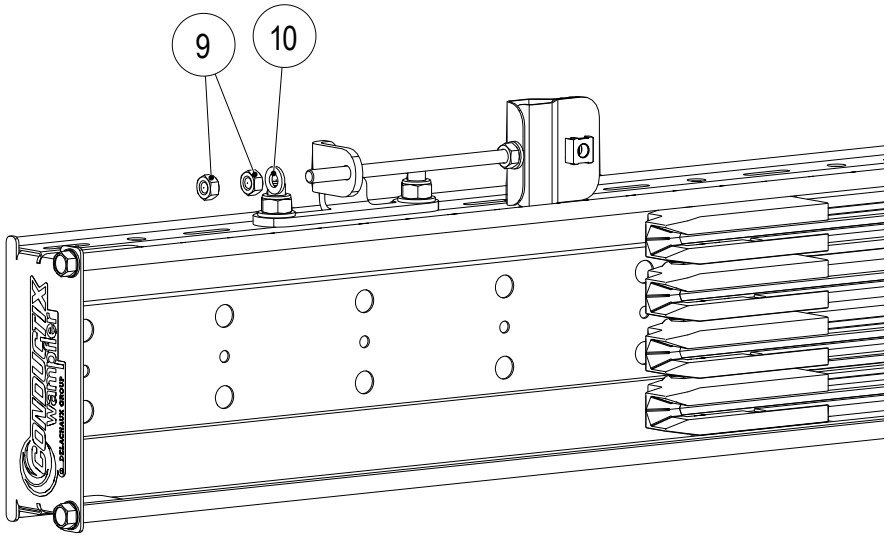

Fig. 45: Counter threaded rod with screw connections (9 and 10)

5. Install the tensioning unit (4) at the beginning and at the end of the ProShell support profile, taking onto account the distance of 1000 mm from the band bracket (1) (see Fig. 46).

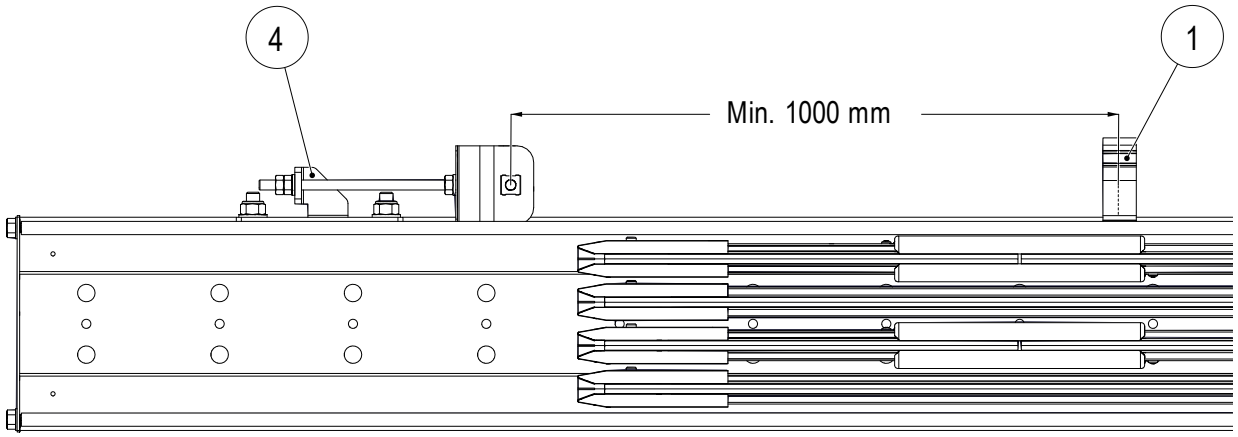

Fig. 46: Observe distance between tensioning unit (4) and band bracket (1)

6. If the positioning band has already been glued onto the positioning band profile, the following procedure can be followed:
   a) Check the position coding of the positioning band according to the system layout. Ensure that the correct position coding is on the right side of the respective clamping unit.
   b) Drill the positioning band profile where the position coding begins (see Fig. 47).
   c) Slide the positioning band profile (11) onto the fastening plate of the clamping unit and tighten the screw connections, consisting of the washer (12) and hexagon screw (13), with an open-end wrench SW 10 (see Fig. 48 and Fig. 49). The clamping unit must be readjusted, if necessary.

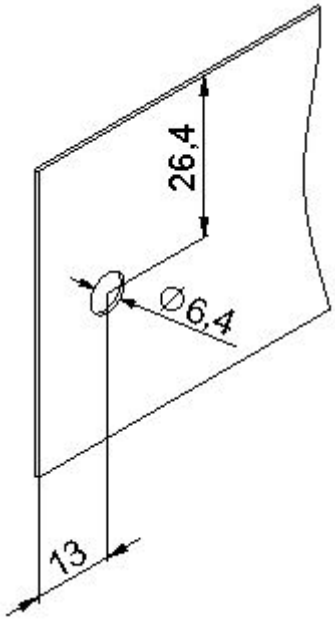

Fig. 47: Drilling pattern of positioning band profile

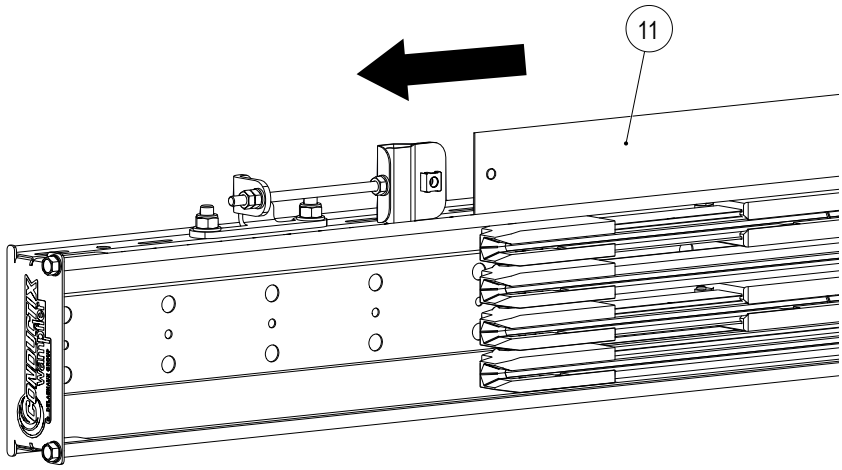

Fig. 48: Slide positioning band profile onto the clamping unit

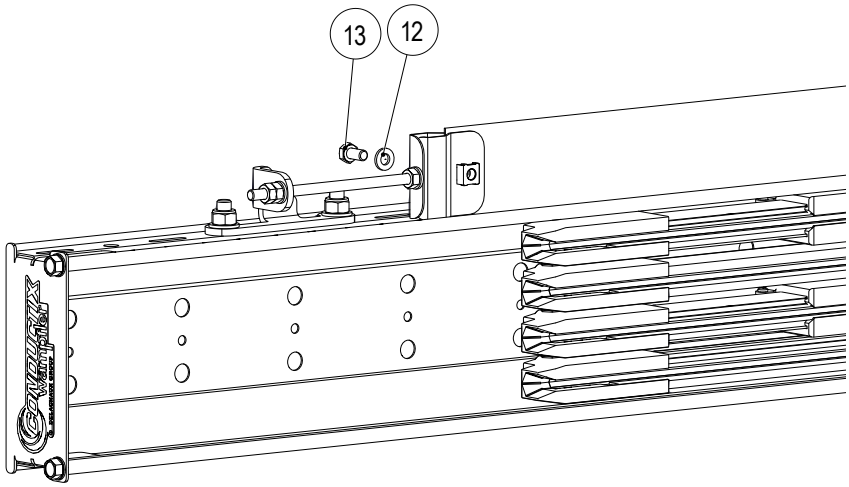

Fig. 49: Install positioning band profile onto clamping unit

d) Clip the positioning band profile onto the band brackets.
e) At the second end of the clamping unit, shorten the positioning band profile with the positioning band glued on with sheet metal shears in such a way that it can be installed in the second clamping unit. Deburr the ends of the positioning band profile. The glued-on positioning band does not need to be subsequently detached from its profile, since it is now longer than it is required.
f) Drill the second hole on the positioning band profile (see Fig. 47).

7. If the positioning band has not been delivered glued on, the following procedure can be followed:
   a) Drill the positioning band profile at one end as shown in Fig. 47.
   b) Install the first end of the positioning band profile on the clamping unit (see Fig. 48 and Fig. 49) and clip it onto the band brackets.
   c) Drill the positioning band profile on the second clamping unit (see Fig. 47) and install it on the clamping unit of the fastening plate (see Fig. 48 and Fig. 49).

The optimal tension is reached when the positioning band profile with the glued positioning band does not form any waves on the band bracket (see Fig. 50).

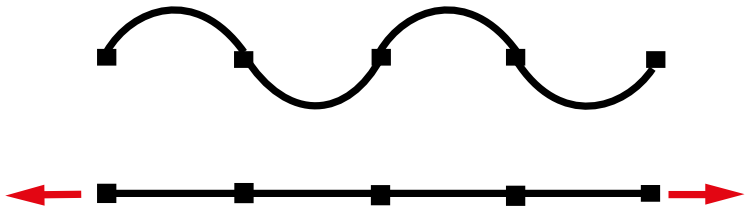

Fig. 50: Top: Too high tension on positioning band profile, Bottom: Optimal tension on positioning band profile

   d) Ensure that the positioning band profile is grease-free and clean.
   e) Glue the positioning band onto the positioning band profile without folding. Observe the project-specific distance between the positioning band and the clamping unit. Please refer to MV0800-0015 for information on how to correct any wrinkles.

Use the QR code ("click" or "scan") to see our animation:
Install positioning module.

5.1.7 Install optional repair kit for ProShell support profile

Procedure:

1. Completely remove the damaged support profile rail (4 m). For this purpose, it can be helpful to make two cuts.
2. Remove a support profile connector.
3. Slide a new support profile rail (4 m) onto the remaining support profile connector.
4. The repair kit is installed at the location where the support profile connector was.
5. Screw the plates (1 and 2) together and place them on the support profile rail from the rear (see Fig. 51).
6. Install the brackets (3) from the front (see Fig. 51).
7. Place the plates (4) in the gap of the tubular support profile area and install (see Fig. 51).

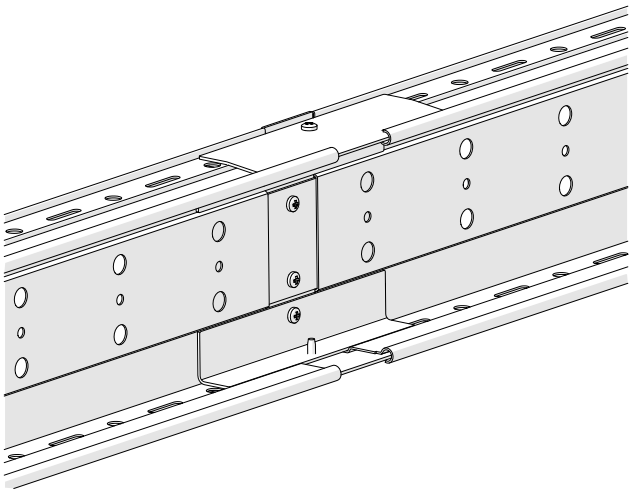

Fig. 51: Support profile rails with repair kit

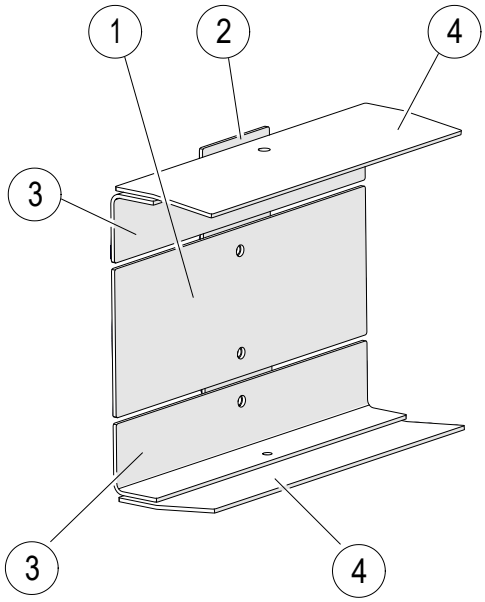

Fig. 52: Repair kit in detail

6 Applicable Documents

- Technical Data Dowel FAZ II (DIS-No. 10000233872)
- MV0800-0031 Conductor Rail System 0812_0831 in ProShell 128_206
- MV0831-0006 Compact Conductor Rail System 0831
- BAL0812-0001 SinglePowerLine 0812
- MV0800-0015-EN Positioning Module

Conductix-Wampfler GmbH
Rheinstraße 27 + 33
79576 Weil am Rhein - Märkt
Germany

Phone: +49 (0) 7621 662-0
Fax: +49 (0) 7621 662-144
info.de@conductix.com
www.conductix.com

Importer for the United Kingdom:
Conductix-Wampfler Ltd.
1, Michigan Avenue
Salford
M50 2GY
United Kingdom

Phone: +44 161 8480161
Fax: +44 161 8737017
info.uk@conductix.com
www.conductix.com

fischer

Bolt anchor FAZ II.
The power anchor for highest demands.

For highest demands. Powerful and flexible.

With a choice of pre-assembled **normal washer or large washer GS** and with washer HBS in compliance with wood construction standard DIN 1052 (not pre-assembled).

The distinctive edge holds the expansion clip in position even with reinforcement hits, thus ensuring **safe installation.**

The protruding hammer-in pin **protects the thread** from damage during setting.

The interaction of cone and expansion clip significantly increases load-bearing capacity and makes **minimum edge distance and axial spacing possible.**

The sizes of the special cap nut version (M10 and M12) can be used for the **application on sophisticated design.** They are also implemented in the ETA assessment.

Variable embedment depths

Enables most accurate adaption on the loads (M 8–M 16).

1. **Maximum load with maximum embedment depth FAZ II 10 R**
- 60 mm embedment depth = maximum permissible tension load of **6.2 kN** and shear load of **15.1 kN**.
- Permissible loads may be calculated for embedment depth between 40 mm and 60 mm.

2. **Fast installation thanks to minimum embedment depth FAZ II 10 R**
- 40 mm embedment depth = permissible tension load of **4.3 kN** and shear load of **11.3 kN**.

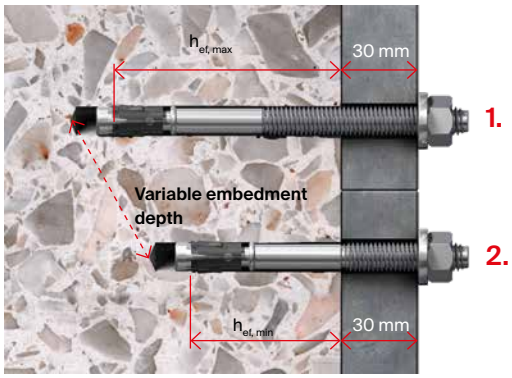

Approvals

ETA-05/0069, for cracked concret

Fire resistance classification R120

M8 – M20

For highest demands. Short and practical.

The 12 sizes of FAZ II K in zinc-plated or stainless steel versions can **be used up to a fixture thickness of 20 mm.** Now for diameter 8 as well.

The shorter bolt with minimum embedment depth is the **economic choice** for numerous applications such as the fixing of cable trays and substructures for façades.

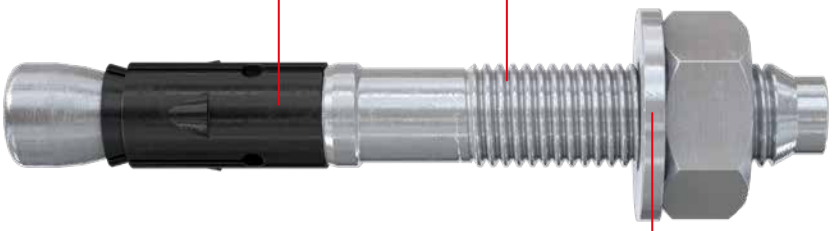

With a choice of **normal washer or large washer GS.**

Functioning

- The FAZ II K is suitable for pre-positioned and push-through installation.
- The small drill hole depth of the short version speeds up installation even further and reduces the number of reinforcement hits.

Your advantages at a glance

- The properties of the FAZ II K considerably minimise the drilling effort and the hammer blows required to drive in the bolt anchor, saving energy and installation time.
- The tried-and-trusted expansion clip ensures a high load-bearing capacity even with minimum embedment depth. This guarantees an unbeatable price-performance ratio.

Approvals

ETA-05/0069, for cracked concret

Fire resistance classification R120

M8 – M20

Advantages, functioning and installation.

Your advantages at a glance

- With the new ETA assessment for Option 1 the tension loads are increased up to 10% and the shear loads up to 17%. So fewer and smaller anchors are required.
- The minimum embedment depth (see example) makes considerably shorter drill hole depths possible, thus provides a noticeably faster installation and less rebar hits.
- The new cup nut, not only gives the option for a better and refined optical design but also, ensures an accident free installation.
- FAZ II 6: First bolt anchor with drill-hole diameter 6 mm and ETA Option 1 worldwide, for safe and approved anchorage.

Functioning

- The FAZ II is suitable for pre-positioned and push-through installation and is also ideal for stand-off installation.
- Experts report for use in concrete C12/15 and C80/95.
- The assessment document covers the use of hollow drills and diamond drills.

Building materials

Suitable for building materials, such as

Cracked concrete

Uncracked concrete

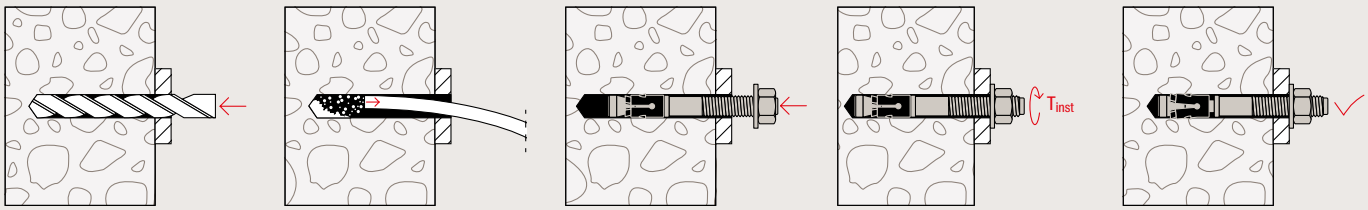

Push trough installation of the cup nut version with setting gauge

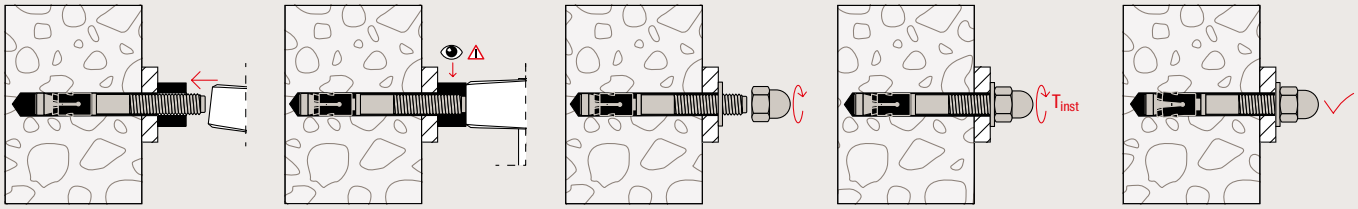

Applications

FAZ II H R

Metal construction

Railings

FAZ II GS R

Façade construction

Façade substructure

FAZ II 12/100 HBS

Timber construction

Wooden sleeper anchorages

Tension anchor

FAZ II K R

Railing fixings

Railing fixings

Façade construction

Façade substructure

FAZ II

Sanitary / Heating / Electric

Pipe hangers

Cable trays

Applications
Design examples

Processing of thin or slim components, balcony railings under thin concrete plate

Basic conditions

- Fixing to the underside of the balcony
- Rail load 0.5 kN/m
- Length of balcony 2.500 mm
- Rail height 1.000 mm
- Post distance 1.000 mm
- Each anchor plate 4 pieces FAZ II 10/10 K R

Installation of cable trays with suspended supports

Basic conditions

- Cable trays
- Distance between anchors 120 mm
- Distance between the suspended supports 2.500 mm
- Anchor plate 60 x 150 mm
- Thickness of concrete ceiling 100 mm
- Each anchor plate 2 pieces FAZ II 10/10 K

Assortment

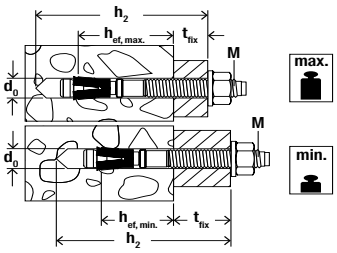

Bolt anchor FAZ II (maximum version)

Bolt anchor FAZ II

	Art.-No.			Approval			Drill diameter	Min. drill hole depth for push-through installation	Anchor length	Maximum embedment depth with respective usable length		Minimum embedment depth with respective usable length		Thread	Sales unit
	Steel, zinc-plated	stainless steel	highly corrosion-resistant steel												
	gvz	R	HCR	ETA	ICC	Seismic C1/C2[1]	d_0 [mm]	h_2 [mm]	l [mm]	$h_{ef,max}$ [mm]	t_{fix} [mm]	$h_{ef,min}$ [mm]	t_{fix} [mm]	Ø x length [mm]	[pcs]
Item															
FAZ II 6/10	542621	542623	–	●	–	–	6	60	65	40	10	–	–	M 6 x 25	50
FAZ II 6/20	542622	542624	–	●	–	–	6	70	75	40	20	–	–	M 6 x 35	50
FAZ II 8/10	94871	501396	–	●	●	C1	8	65	75	45	10	35[2]	20	M 8 x 38	50
FAZ II 8/10	–	–	501428	●	●	C1	8	65	75	45	10	35[2]	20	M 8 x 38	10
FAZ II 8/30	94877	501399	–	●	●	C1	8	85	95	45	30	35[2]	40	M 8 x 58	50
FAZ II 8/30	–	–	501429	●	●	C1	8	85	95	45	30	35[2]	40	M 8 x 58	10
FAZ II 8/50	94878	501401	–	●	●	C1	8	105	115	45	50	35[2]	60	M 8 x 78	50
FAZ II 8/100	94879	–	–	●	●	C1	8	155	165	45	100	35[2]	110	M 8 x 128	25
FAZ II 8/160	503251	–	–	●	●	C1	8	215	225	45	160	35[2]	170	M 8 x 100	20
FAZ II 10/10	94981	501403	–	●	●	C1/C2	10	85	95	60	10	40	30	M 10 x 53	50
FAZ II 10/10	–	–	501430	●	●	C1	10	85	95	60	10	40	30	M 10 x 53	10
FAZ II 10/20	94982	–	–	●	●	C1/C2	10	95	105	60	20	40	40	M 10 x 63	25
FAZ II 10/20	–	501406	–	●	●	C1/C2	10	95	105	60	20	40	40	M 10 x 63	50
FAZ II 10/30	94983	–	–	●	●	C1/C2	10	105	115	60	30	40	50	M 10 x 73	25
FAZ II 10/30	–	501407	–	●	●	C1/C2	10	105	115	60	30	40	50	M 10 x 73	50
FAZ II 10/30	–	–	503185	●	●	C1	10	105	115	60	30	40	50	M 10 x 73	10
FAZ II 10/50	94984	501409	–	●	●	C1/C2	10	125	135	60	50	40	70	M 10 x 93	20
FAZ II 10/70	–	501410	–	●	●	C1/C2	10	145	155	60	70	40	90	M 10 x 113	20
FAZ II 10/80	94985	–	–	●	●	C1/C2	10	155	165	60	80	40	100	M 10 x 123	20
FAZ II 10/100	94986	501411	–	●	●	C1/C2	10	175	185	60	100	40	120	M 10 x 143	20
FAZ II 10/160	503252	501412	–	●	●	–	10	235	245	60	160	40	180	M 10 x 193	20
FAZ II 12/10	95419	501413	–	●	●	C1/C2	12	100	110	70	10	50	30	M 12 x 61	20
FAZ II 12/10	–	–	503186	●	●	C1	12	100	110	70	10	50	30	M 12 x 61	10
FAZ II 12/20	95420	501415	–	●	●	C1/C2	12	110	120	70	20	50	40	M 12 x 71	20
FAZ II 12/30	95421	501416	–	●	●	C1/C2	12	120	130	70	30	50	50	M 12 x 81	20
FAZ II 12/30	–	–	501431	●	●	C1	12	120	130	70	30	50	50	M 12 x 81	10
FAZ II 12/50	95446	501419	–	●	●	C1/C2	12	140	150	70	50	50	70	M 12 x 101	20
FAZ II 12/60	–	501420	–	●	●	C1/C2	12	150	160	70	60	50	80	M 12 x 111	20
FAZ II 12/80	95454	–	–	●	●	C1/C2	12	170	180	70	80	50	100	M 12 x 131	20
FAZ II 12/100	95470	501421	–	●	●	C1/C2	12	190	200	70	100	50	120	M 12 x 151	20
FAZ II 12/160	503253	–	–	●	●	–	12	250	260	70	160	50	180	M 12 x 186	10

[1] Only with maximum embedment depth
[2] With minimum embedment depth only for statically interdeterminate systems

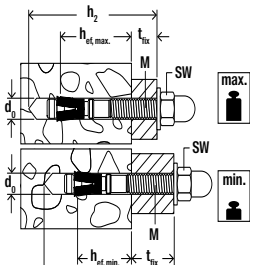

Bolt anchor FAZ II (maximum version) / Bolt anchor FAZ II H (version with cap nut)

Bolt anchor FAZ II Bolt anchor FAZ II H

	Art.-No.			Approval			Drill diameter	Min. drill hole depth for push-through installation	Anchor length	Max. anchoring depth with related working length		Min. anchoring depth with related working length		Thread	Sales unit
	Steel, zinc-plated	stainless steel	highly corrosion-resistant steel												
	gvz	R	HCR	ETA	ICC	Seismic C1/C2[1]	d_0 [mm]	h_2 [mm]	l [mm]	$h_{ef,max}$ [mm]	t_{fix} [mm]	$h_{ef,min}$ [mm]	t_{fix} [mm]	Ø x length [mm]	[pcs]
Item															
FAZ II 12/160	–	503180	–	●	●	–	12	250	260	70	160	50	180	M 12 x 186	20
FAZ II 12/200	95605	–	–	●	●	–	12	290	300	70	200	50	220	M 12 x 186	10
FAZ II 16/5	522124	–	–	●	●	C1/C2	16	115	128	85	5	65	25	M 16 x 64	10
FAZ II 16/5	–	522125	–	●	●	C1/C2	16	115	128	85	5	65	25	M 16 x 64	20
FAZ II 16/25	–	501423	–	●	●	C1/C2	16	135	148	85	25	65	45	M 16 x 84	10
FAZ II 16/25	95836	–	–	●	●	C1/C2	16	135	148	85	25	65	45	M 16 x 84	10
FAZ II 16/25	–	–	501432	●	●	C1	16	135	148	85	25	65	45	M 16 x 84	10
FAZ II 16/50	95864	–	503187	●	●	C1	16	160	173	85	50	65	70	M 16 x 109	10
FAZ II 16/50	–	501424	–	●	●	C1/C2	16	160	173	85	50	65	70	M 16 x 109	20
FAZ II 16/60	–	532570	–	●	●	C1/C2	16	170	183	85	60	65	80	M 16 x 119	20
FAZ II 16/100	95865	501425	–	●	●	C1/C2	16	210	223	85	100	65	120	M 16 x 159	10
FAZ II 16/160	503254	–	–	●	●	C1/C2	16	270	283	85	160	65	180	M 16 x 189	10
FAZ II 16/200	95967	–	–	●	●	–	16	310	323	85	200	65	220	M 16 x 189	10
FAZ II 16/250	95968	–	–	●	●	–	16	360	373	85	250	65	270	M 16 x 100	10
FAZ II 16/300	96188	–	–	●	●	–	16	410	423	85	300	65	320	M 16 x 100	10
FAZ II 20/30	46632	–	–	●	●	C1/C2	20	155	172	100	30	–	–	M 20 x 54	5
FAZ II 20/30	–	501426	–	●	●	C1/C2	20	155	172	100	30	–	–	M 20 x 54	4
FAZ II 20/60	46633	–	–	●	●	C1/C2	20	185	202	100	60	–	–	M 20 x 84	5
FAZ II 20/60	–	503183	–	●	●	C1/C2	20	185	202	100	60	–	–	M 20 x 84	4
FAZ II 20/160	503255	–	–	●	●	C1/C2	20	285	302	100	160	–	–	M 20 x 100	5
FAZ II 24/30	46635	–	–	●	●	C1	24	185	205	125	30	–	–	M 24 x 58	5
FAZ II 24/30	–	501427	–	●	●	C1	24	185	205	125	30	–	–	M 24 x 58	4
FAZ II 24/60	46636	–	–	●	●	C1	24	215	235	125	60	–	–	M 24 x 88	5
FAZ II 24/60	–	503184	–	●	●	C1/C2	24	215	235	125	60	–	–	M 24 x 88	4
FAZ II 10/10 H	543392	543396	–	●	–	C1/C2	10	87	95	60	10	40	30	M 10 x 53	20
FAZ II 10/20 H	543393	543397	–	●	–	C1/C2	10	97	105	60	20	40	40	M 10 x 63	20
FAZ II 12/10 H	543394	543398	–	●	–	C1/C2	12	99	109	70	10	50	30	M 12 x 61	20
FAZ II 12/20 H	543395	543399	–	●	–	C1/C2	12	109	119	70	20	50	40	M 12 x 71	20

[1] Only with maximum embedment depth
[2] With minimum embedment depth only for statically interdeterminate systems

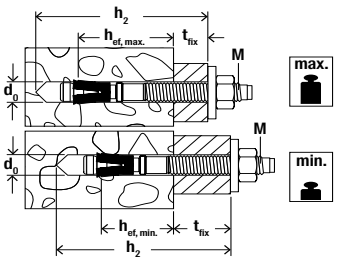

Bolt anchor FAZ II GS (with large washer) / FAZ II HBS (washer compliant to timber construction standard DIN 1052)

Bolt anchor FAZ II GS / Bolt anchor FAZ II HBS

	Art.-No.		Approval		Drill diameter	Min. drill hole depth for push-through installation	Anchor length	Maximum embed-ment depth with respective usable length		Minimum embed-ment depth with respective usable length		Thread	Washer (outer diameter x thickness)	Sales unit
	Steel, zinc-plated	stainless steel												
	gvz	R	ETA	Seismic C1/C2[1]	d_0 [mm]	h_2 [mm]	l [mm]	$h_{ef,max}$ [mm]	t_{fix} [mm]	$h_{ef,min}$ [mm]	t_{fix} [mm]	Ø x length [mm]	[mm]	[pcs]
Item														
FAZ II 8/10 GS	**94872**	**501398**	●	C1	8	65	75	45	10	35 [2]	20	M 8 x 38	22 x 2.5	50
FAZ II 8/30 GS	**96189**	**501400**	●	C1	8	85	95	45	30	35 [2]	40	M 8 x 58	22 x 2.5	50
FAZ II 10/10 GS	**96291**	**501405**	●	C1/C2	10	85	95	60	10	40	30	M 10 x 53	25 x 3	50
FAZ II 10/30 GS	**96297**	**–**	●	C1/C2	10	105	115	60	30	40	50	M 10 x 73	25 x 3	25
FAZ II 10/30 GS	**–**	**501408**	●	C1/C2	10	105	115	60	30	40	50	M 10 x 73	25 x 3	50
FAZ II 12/10 GS	**96303**	**501414**	●	C1/C2	12	100	110	70	10	50	30	M 12 x 61	30 x 3	20
FAZ II 12/20 GS	**502530**	**–**	●	C1/C2	12	110	120	70	20	50	40	M 12 x 71	30 x 3	20
FAZ II 12/30 GS	**96340**	**501418**	●	C1/C2	12	120	130	70	30	50	50	M 12 x 81	30 x 3	20
FAZ II 12/50 GS	**502531**	**–**	●	C1/C2	12	140	150	70	50	50	70	M 12 x 101	30 x 3	20
FAZ II 12/80 GS	**538430**	**–**	●	C1/C2	12	170	180	70	80	50	100	M 12 x 131	44 x 4	20
FAZ II 12/100 GS 30x3	**502532**	**–**	●	C1/C2	12	190	200	70	100	50	120	M 12 x 151	30 x 3	20
FAZ II 12/100 GS	**538702**	**–**	●	C1/C2	12	190	200	70	100	50	120	M 12 x 151	44 x 4	20
FAZ II 12/120 GS 30x3	**96367**	**–**	●	C1/C2	12	210	220	70	120	50	140	M 12 x 171	30 x 3	20
FAZ II 12/120 GS	**538703**	**–**	●	C1/C2	12	210	220	70	120	50	140	M 12 x 171	44 x 4	20
FAZ II 12/140 GS	**538433**	**–**	●	–	12	230	240	70	140	50	160	M 12 x 186	44 x 4	20
FAZ II 12/160 GS	**538431**	**–**	●	–	12	250	260	70	160	50	180	M 12 x 186	44 x 4	20
FAZ II 12/160 GS	**–**	**503181**	●	–	12	250	260	70	160	50	180	M 12 x 186	44 x 4	20
FAZ II 12/180 GS	**538434**	**–**	●	–	12	270	280	70	180	50	200	M 12 x 186	44 x 4	20
FAZ II 12/200 GS	**538432**	**–**	●	–	12	290	300	70	200	50	220	M 12 x 186	44 x 4	20
FAZ II 16/160 GS	**503261**	**–**	●	C1/C2	16	270	283	85	160	65	180	M 16 x 189	56 x 5	10
FAZ II 16/160 GS	**–**	**503182**	●	C1/C2	16	270	283	85	160	65	180	M 16 x 100	56 x 5	4
FAZ II 16/200 GS	**96370**	**–**	●	–	16	310	323	85	200	65	220	M 16 x 189	56 x 5	10
FAZ II 12/100 HBS	**522951**	**–**	●	C1/C2	12	190	205	70	100	50	120	M 12 x 151	58 x 6	20
FAZ II 12/120 HBS	**522952**	**–**	●	–	12	210	225	70	120	50	140	M 12 x 171	58 x 6	20
FAZ II 16/160 HBS	**522953**	**–**	●	C1/C2	16	270	278	85	160	65	180	M 16 x 189	68 x 6	10
FAZ II 16/200 HBS	**522954**	**–**	●	–	16	310	328	85	200	65	220	M 16 x 189	68 x 6	10

[1] Only with maximum embedment depth
[2] With minimum embedment depth only for statically interdeterminate systems

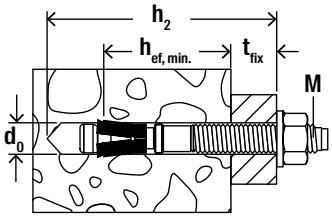

Bolt anchor FAZ II K / FAZ II K GS (short version)

Bolt anchor FAZ II K Bolt anchor FAZ II K / FAZ II K GS

	Art.-No.		Approval		Drill diameter	Min. drill hole depth for push-through installation	Anchor length	Minimum embedment depth with respective usable length		Thread	Washer (outer diameter x thickness)	Sales unit
	Steel, zinc-plated	stainless steel										
	gvz	R	ETA	Seismic C1/C2[1]	d_0 [mm]	h_2 [mm]	l [mm]	$h_{ef,min}$ [mm]	t_{fix} [mm]	Ø x length [mm]	[mm]	[pcs]
Item												
FAZ II 8/5 K	**538989**	**538990**	●	–	8	45	60	35[1]	5	M 8 x 23	16 x 1.6	50
FAZ II 10/10 K	**522108**	**522116**	●	C1/C2	10	65	75	40	10	M 10 x 33	20 x 2.0	50
FAZ II 10/20 K	**522110**	**–**	●	C1/C2	10	75	85	40	20	M 10 x 43	20 x 2.0	25
FAZ II 10/20 K	**–**	**522117**	●	C1/C2	10	75	85	40	20	M 10 x 43	20 x 2.0	50
FAZ II 12/10 K	**522118**	**522122**	●	C1/C2	12	80	90	50	10	M 12 x 41	24 x 2.5	20
FAZ II 12/20 K	**522119**	**522123**	●	C1/C2	12	90	100	50	20	M 12 x 51	24 x 2.5	20
FAZ II 10/10 K GS	**522115**	**–**	●	C1/C2	10	65	75	40	10	M 10 x 33	25 x 3.0	50
FAZ II 12/10 K GS	**522121**	**–**	●	C1/C2	12	80	90	50	10	M 12 x 41	30 x 3.0	20

[1] With minimum embedment depth only for statically interdeterminate systems

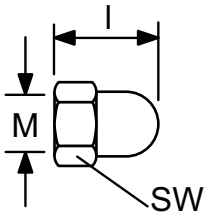

Cap nut FAZ II

Cap nut FAZ II

	Art.-No.		Approval	Thread	Cap nut height	Key width	Sales unit
	Steel, zinc-plated	stainless steel					
	gvz	C	ETA	Ø x length [mm]	[mm]	[mm]	[pcs]
Item							
FAZ II M10[1]	**543977**	**543979**	●	M 10	23	17	20
FAZ II M12[1]	**543978**	**543980**	●	M 12	29	19	20

[1] Can be combined wit h all bolt anchors FAZ II M 10 and M12 in accor dance with approval.

Accessories

Addition for					
					
Filling disk FFD		Bolt anchor-Setting tool FABS		Bolt anchor-Setting tool FA-ST	
Item	Art.-No.	Inner-Ø [mm]	Outer-Ø [mm]	Suitable for	Sales unit [pcs]
FFD 26x12x6	538458	12	26	FAZ II M8/10	4
FFD 26x12x6 R	541986	12	26	FAZ II M8/M10 R	4
FFD 30x14x6	538459	14	30	FAZ II M12	4
FFD 30x14x6 R	541987	14	30	FAZ II M12 R	4
FFD 38x19x7	538460	19	40	FAZ II M16	4
FFD 38x19x7 R	541988	19	40	FAZ II M16 R	4
FFD 46x23x8	538461	23	46	FAZ II M20	4
FFD 46x23x8 R	541989	23	46	FAZ II M20 R	4
FFD 54x28x10	538462	28	54	FAZ II M24	4
FFD 55x28x10 R	541990	28	54	FAZ II M24 R	4
FABS	077937	–	–	FAZ II for diameter from M6 up to M12	1
FA-ST M10	541891	–	–	FAZ II for diameter M10	1
FA-ST M12	541892	–	–	FAZ II for diameter M12	1

fischer filling disc FFD

Optional e.g. for use under seismic loads C2 or to minimise the hole clearance:
The annular gap between bolt and attachment may be filled with mortar (compressive strength ≥ 50 N/mm² e.g. FIS V, FIS EM Plus, FIS HB and FIS SB). The backfilling disc would be used in addition to the standard washer to be used. The thickness of the backfill disc must be taken into account for t_{fix}. The counterbore in the filling disk must point in the direction of the attachment part.

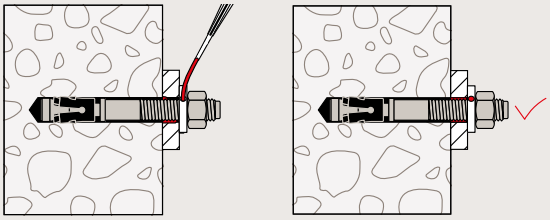

Loads

Bolt anchor FAZ II

For the design the complete current assessment ETA-05/0069 has to be considered.

Type	Material / surface[2]	Effective anchorage depth h_{ef} [mm]	Minimum member thickness h_{min} [mm]	Installation torque T_{inst} [Nm]	Cracked concrete: Permissible Tension (N_{perm}), Shear loads (V_{perm}), minimum spacing (s_{min}) and edge distances (c_{min})				Non-cracked concrete: Permissible Tension (N_{perm}), Shear loads (V_{perm}), minimum spacing (s_{min}) and edge distances (c_{min})			
					N_{perm}[3] [kN]	V_{perm}[3] [kN]	s_{min}[3] [mm]	c_{min}[3] [mm]	N_{perm}[3] [kN]	V_{perm}[3] [kN]	s_{min}[3] [mm]	c_{min}[3] [mm]
FAZ II 6	gvz	40	90	8	0.7	3.4	35	45	3.6	3.4	35	45
	R	40	90	8	0.7	5.0	35	45	5.0	5.0	35	45
FAZ II 8	gvz	35	80	20	2.6	7.8	35	40	4.9	7.8	40	40
	gvz	45	90	20	3.8	7.8	35	40	6.7	7.8	40	40
	R	35	80	20	2.6	9.5	35	40	4.9	9.6	40	40
	R	45	90	20	3.8	9.6	35	40	6.7	9.6	40	40
FAZ II 10	gvz	40	90	45	4.1	12.2	40	45	5.9	12.2	40	45
	gvz	60	110	45	6.2	12.2	40	45	9.5	12.2	40	45
	R	40	90	45	4.1	13.3	40	45	5.9	15.1	40	45
	R	60	110	45	6.2	15.1	40	45	9.5	15.1	40	45
FAZ II 12	gvz	50	100	60	5.8	17.5	50	55	8.3	17.5	50	55
	gvz	70	120	60	9.5	17.5	50	55	10.5	17.5	50	55
	R	50	100	60	5.8	18.6	50	55	8.3	21.9	50	55
	R	70	120	60	9.5	21.9	50	55	10.5	21.9	50	55
FAZ II 16	gvz	65	140	110	8.6	31.4	60	65	12.3	31.4	65	65
	gvz	85	140	110	12.9	31.4	60	65	18.4	31.4	65	65
	R	65	140	110	8.6	25.8	60	65	12.3	36.8	65	65
	R	85	140	110	12.9	38.6	60	65	18.4	39.9	65	65
FAZ II 20	gvz	100	170	200	16.4	42.6	95	85	23.4	46.5	95	95
	R	100	170	200	16.4	42.6	95	85	23.4	60.7	95	95
FAZ II 24	gvz	125	210	270	22.9	55.0	100	100	32.7	62.9	100	135
	R	125	210	270	22.9	55.0	100	100	32.7	78.6	100	135

[1] Design according to EN 1992-4:2018 (for static resp. quasi-static loads). The partial safety factors for material resistance as regulated in the ETA as well as a partial safety factor for load actions of $\gamma_L = 1.4$ are considered. As a single anchor counts e.g. an anchor with a spacing $s \geq 3 \times h_{ef}$ and an edge distance $c \geq 1.5 \times h_{ef}$. Accurate data see ETA

[2] Further steel grades, versions and technical data see ETA, e.g. for dry internal conditions, galvanised steel (gvz); for damp interior, stainless steel (R) and exterior conditions, e.g. material 1.4362, 1.4401.

[3] In the case of combinations of tensile and shear loads, bending moments and reduced edge and axial spacings (anchor groups), the design must be carried out in accordance with the provisions of the complete ETA and the provisions of the EN 1992-4:2018. We recommend to use our anchor design software C-Fix.

fischer hollow drill bit. For drilling with low dust as well as for efficient and approved anchoring.

fischer Service

Our 360° service to you

From software solutions, to training, to personal consulting. As a reliable partner, we are always happy to assist you with words and deeds.

FIXPERIENCE

Design Software fischer FIXPERIENCE

The fischer design Software FIXPERIENCE gives you safe and reliable support in measuring your projects whether you are a planer, structural engineer or craftsman. *Measuring has never been so simple!*

Professional

fischer

Professional App. The mobile fixing expert for the craftsman.

With the fischer Professional App, you can quickly and easily obtain information about products, find your nearest dealer or find the right solution for your application. Download now from the Apple or Google Play Store.

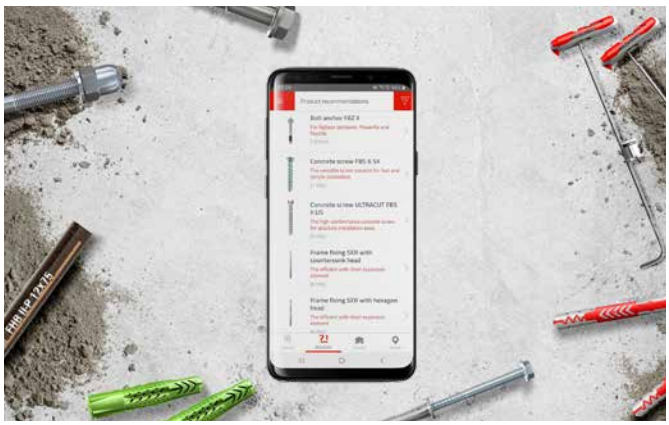

Dealer:

www.fischer-international.com

fischer stands for

Fixing Systems
Automotive
fischertechnik
Consulting
LNT Automation

fischerwerke GmbH & Co. KG
Klaus-Fischer-Straße 1 · 72178 Waldachtal
Germany
T +49 7443 12 - 0
www.fischer-international.com · info@fischer.de

505099 (8) · 07/2020 · V-MKS · Printed in Germany · Subject to technical modifications.